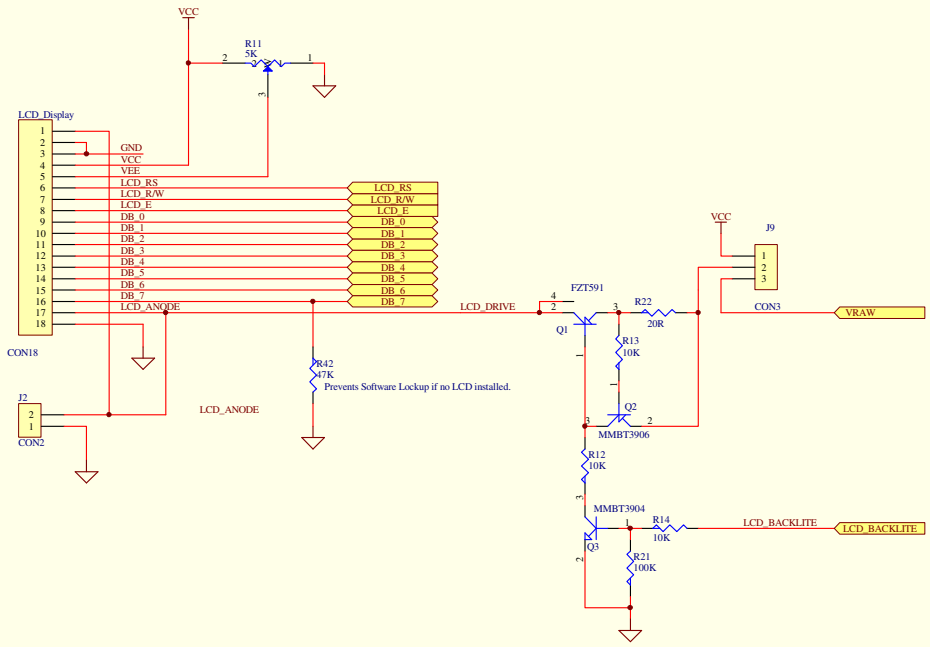

Automation Artisans Inc.
2335 Tanner Road
Victoria, BC
CANADA. V8Z 5P8

ELS LCD Interface c/w LCD backlight control

Size	FCSM No.	DWG No.	Rev
Tabloid			Rev. 2.3

Scale		Sheet
		4 of 8